ROHS

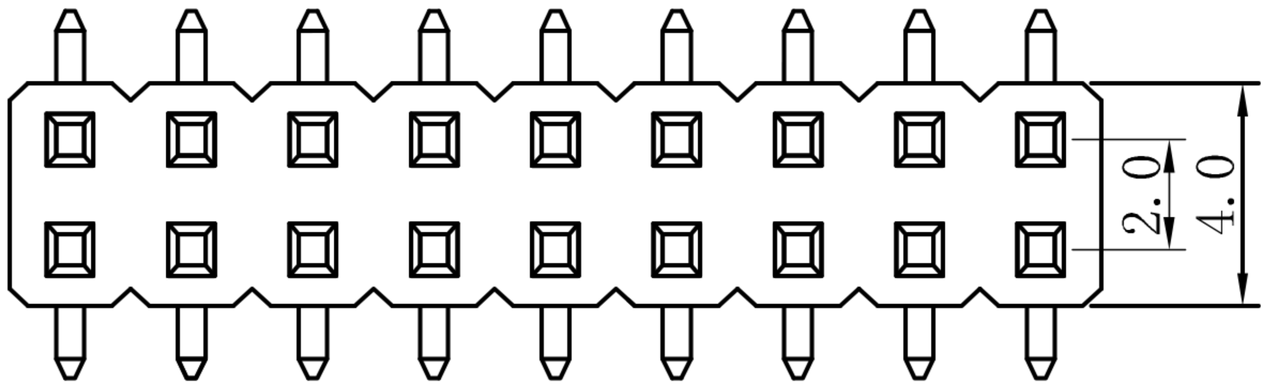

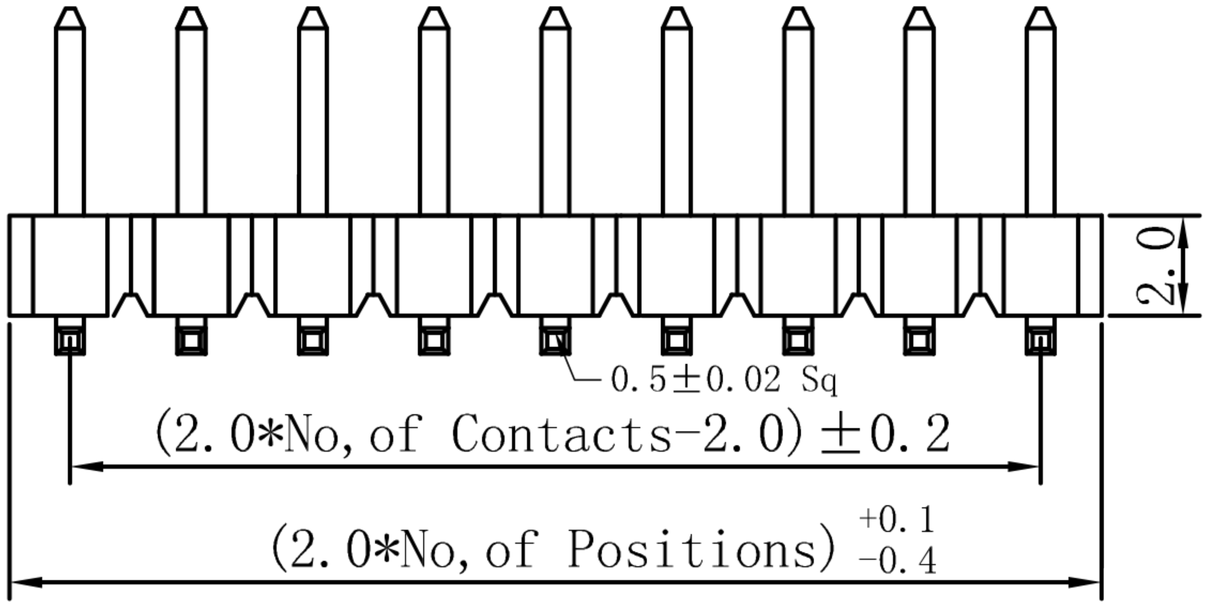

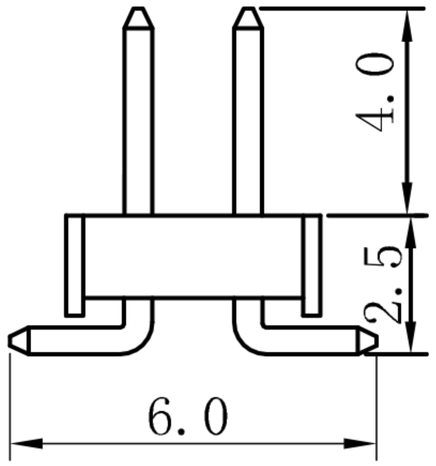

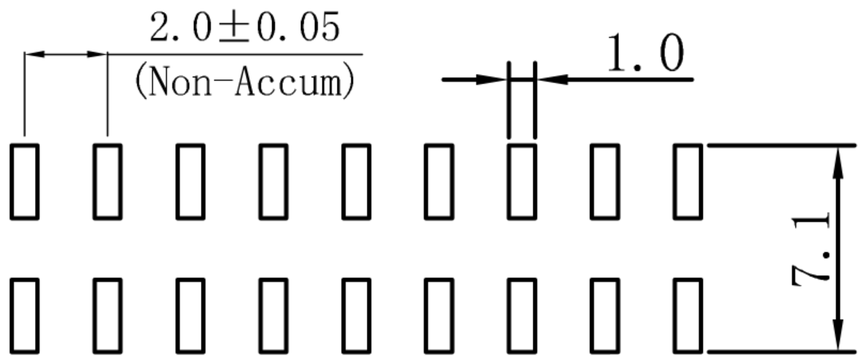

PCB LAYOUT

SPECIFICATIONS

Current Rating: 2Amps
Insulator resistance: 5000 Megohms min.
Dielectric Withstaanding: AC 500V
Operating Temperature: -40° TO +105°C
Max Processing Temp: 230° TO 260° for 30-60 seconds
Contact Materiaal: Brass
Plating: Gold Flash
Insulator Material: NY-9T

UNSPECIFIED TOLERANCE: ±0.20

Dimensions list

Contacts Per row	Dimensions A	Dimensions B	Contacts Per row	Dimensions A	Dimensions B
1	2.0	0	21	42.0	40.0
2	4.0	2.0	22	44.0	42.0
3	6.0	4.0	23	46.0	44.0
4	8.0	6.0	24	48.0	46.0
5	10.0	8.0	25	50.0	48.0
6	12.0	10.0	26	52.0	50.0
7	14.0	12.0	27	54.0	52.0
8	16.0	14.0	28	56.0	54.0
9	18.0	16.0	29	58.0	56.0
10	20.0	18.0	30	60.0	58.0
11	22.0	20.0	31	62.0	60.0
12	24.0	22.0	32	64.0	62.0
13	26.0	24.0	33	66.0	64.0
14	28.0	26.0	34	68.0	66.0
15	30.0	28.0	35	70.0	68.0
16	32.0	30.0	36	72.0	70.0
17	34.0	32.0	37	74.0	72.0
18	36.0	34.0	38	76.0	74.0
19	38.0	36.0	39	78.0	76.0
20	40.0	38.0	40	80.0	78.0

ECN NO.	REV.	DATE.	DESCRIPTION.	CHANGE.	CHECK.	APPRO.
———	A	———	NEW	———	———	———

APPROVALS		DATE
DRAWN	ZHIWEI.CHEN	2015.07.07
CHECKED		
APPROVALS		

TOLERANCES ARE: 30~以上 ±0.30; 10~30 ±0.20; 5~10 ±0.15; ~ 5 ±0.10; ANGLE ±2°

深圳市联丰盈电子有限公司
SHENZHEN LINFENYING ELECTRONIC CO.,LTD

TITLE:
PART NO. GP26-2020WVS-2*NP
UNIT: mm SCALE: 1:1 PROJ:
DRAWING NO. ———— SHEET 1 OF 1